
TAB
TAB

GENERAL

1. STRUCTURAL DRAWINGS SHALL BE READ IN CONJUNCTION WITH THE SPECIFICATION, CIVIL AND ENGINEERING SERVICES DOCUMENTS.
2. UNLESS OTHERWISE NOTED, ALL LEVELS ARE METRES, AND ALL DIMENSIONS ARE IN MILLIMETRES.
3. DIMENSIONS SHALL NOT BE OBTAINED BY SCALING FROM DRAWINGS.
4. ALL DISCREPANCIES SHALL BE REFERRED TO THE DESIGN ENGINEER FOR RESOLUTION BEFORE PROCEEDING WITH THE WORK.
5. THE STABILITY OF THE STRUCTURE DURING CONSTRUCTION IS THE RESPONSIBILITY OF THE CONTRACTOR.
6. ALL MATERIALS AND WORKMANSHIP SHALL BE IN ACCORDANCE WITH THE CURRENT NEW ZEALAND STANDARDS EXCEPT WHERE VARIED BY THE SPECIFICATION AND/OR DRAWINGS.
7. WHERE PROPRIETRY PRODUCTS ARE SPECIFIED IN THE DOCUMENTS THE CONTRACTOR MUST SUBMIT ALL ALTERNATIVE PRODUCTS FOR APPROVAL IF WISHING TO CHANGE.
8. CONTRACTOR TO CHECK LOCATION OF EXISTING SERVICES PRIOR TO ANY EXCAVATION WORK. NOTIFY ENGINEER OF ANY CONFLICTS AND AWAIT APPROVAL BEFORE PROCEEDING.
9. D&E INDICATES DRILL & EPOXY WITH EPCON C6 (UNLESS NOTED OTHERWISE).

CONCRETE

1. MINIMUM CONCRETE STRENGTHS SHALL BE AS FOLLOWS, UNLESS NOTED OTHERWISE ON DRAWINGS.

ELEMENT	MPa
FOUNDATION	30
FLOOR	30
PRECAST	30

2. SIZES OF CONCRETE ELEMENTS DO NOT INCLUDE THICKNESS OF APPLIED FINISHES.
3. CONSTRUCTION JOINTS WHERE NOT SHOWN ON DRAWINGS SHALL BE LOCATED TO THE APPROVAL OF THE ENGINEER.
4. NO PENETRATIONS, CHASES OR EMBEDMENT OF PIPES OTHER THAN THOSE SHOWN ON THE STRUCTURAL DRAWINGS SHALL BE MADE IN ON CONCRETE MEMBERS WITHOUT THE PRIOR APPROVAL OF THE ENGINEER.
5. CONTRACTOR SHALL SUBMIT SHOP DRAWINGS OF ALL PRECAST UNITS FOR APPROVAL PRIOR TO COMMENCEMENT OF WORK.
6. TOLERANCES AND FINISHES TO BE AS PER SPECIFICATION.
7. SCHEDULES OF SURFACE FINISHES: NZS3114:1987.

ELEMENT	FINISH
EXPOSED CONCRETE FACES OF ABUTMENTS AND PILES	F5
CONCEALED FOUNDATION SURFACES	U1
TOP SURFACES OF FOUNDATIONS BEAMS AND PADS	U3
VISIBLE FOUNDATION SURFACES	F5
CONCRETE NOT EXPOSED IN FINISHED STRUCTURE (FORMED)	F1
CONCRETE NOT EXPOSED IN FINISHED STRUCTURE (UNFORMED)	U3
ALL PRECAST SURFACES EXPOSHED IN THE FINISHED JOB	F5

*OFF A STEEL FORM

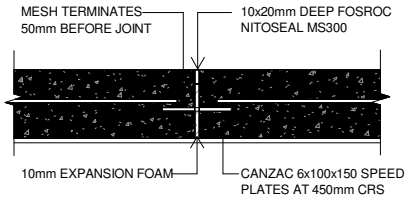

TYPICAL CONTROL JOINT DETAIL

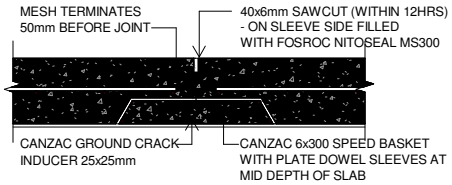

TYPICAL SAWCUT DETAIL

PRECAST WALLS

1. PROP WALLS FULLY DURING CONSTRUCTION UNTIL FOUNDATIONS REACH FULL STRENGTH.

REINFORCEMENT

1. REINFORCING DESIGNATION AS FOLLOWS:

   NOTE: DH BARS ARE NOT TO BE REBENT .

SYMBOL	TYPE
R	PLAIN BARS GRADE 300 TO AS/NZS 4671 (300 MPa)
RH	PLAIN BARS GRADE 500 TO AS/NZS 4671 (500 MPa)
D	DEFORMED BARS GRADE 300 TO AS/NZS 4671 (300 MPa)
DH	DEFORMED BARS GRADE 500 TO AS/NZS 4671 (500 MPa)
M	MESH TO NZS 3422
RB	DEFORMED REIDBAR GRADE 500 MPa

2. CLEAR COVER TO ALL REINFORCEMENT, INCLUDING STIRRUPS, TIES ETC SHALL BE AS FOLLOWS, UNLESS NOTED OTHERWISE ON THE DRAWINGS AND SPECIFICATION.

   NZS 3101:2006

   EXPOSURE CLASSIFICATION (TABLE 3.1) = A2

   (REF. - FIG. 3.1 (A) NZS 3101:2006 NORTH ISLAND) TAURANGA

TABLE 3.6 - MINIMUM REQUIRED COVER FOR A SPECIFIED INTENDED LIFE OF 50 YEARS

EXPOSURE CLASSIFICATION	CEMENT BINDER TYPE	SPECIFIED COMPRESSIVE STRENGTH (MPa)						
		25	30	35	40	45	50	60-100
		MINIMUM REQUIRED COVER (mm)						
A1	GP, GB OR HE	25	20	20	20	20	20	20
A2	GP, GB OR HE	35	30	30-	25	25	25	20
B1	GP, GB OR HE	40	35	35	30	30	30	25
B2	GP, GB OR HE	-	45	40	35	30	30	25
C (I)	30 % FA	-	-	-	60	60	60	55
C (I)	65 % GBS	-	-	-	-	50	50	50
C (I)	8 % MS	-	-	-	-	60	50	50

NOTE:

FOR ZONE C THE TOTAL BINDER CONTENT SHALL BE EQUAL TO OR GREATER THAN 350kg/m³ AND WATER TO BINDER RATIO SHALL NOT EXCEED 0.45
THE MINIMUM COVER FOR THE C ZONE SHALL BE 50mm

3.11.3.3 CASTING AGAINST GROUND:
WHERE CONCRETE IS CAST ON OR AGAINST GROUND AND COMPACTED IN ACCORDANCE WITH NZS 3109, THE MINIMUM COVER FOR A SURFACE IN CONTACT WITH THE GROUND SHALL BE 75MM, OR 50MM IF USING A DAMP-PROOF MEMBRANE BETWEEN THE GROUND AND THE CONCRETE TO BE CAST.

3. NO REINFORCEMENT SPLICES SHALL BE MADE OTHER THAN THOSE SHOWN ON THE STRUCTURAL DRAWINGS WITHOUT THE PRIOR APPROVAL OF THE ENGINEER.
   REINFORCEMENT LAPS IN CONCRETE TO COMPLY WITH THE TABLE BELOW:
   SPLICE LAP LENGTHS FOR DEFORMED BARS (IN MM) NZS3101:2006 8.6.3 (EQN 8.2).

   LAPS

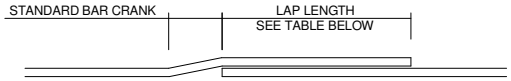

   LAP LENGTHS

HOOK BARS	12 Ø
D BARS	40 Ø
DH BARS	50 Ø

   THE DEVELOPMENT OF PLAIN BARS SHALL RELY ON HOOKS.

4. EPOXY GROUTING OF REINFORCING BARS INTO CONCRETE:
   HOLES FOR VERTICAL BARS SHALL BE VERTICAL. HOLES FOR HORIZONTAL STARTERS SHALL SLOPE DOWN AT 15 DEGREES.
5. WELDING OF REINFORCEMENT IS NOT PERMITTED.
6. TOP AND BOTTOM REINFORCEMENT IN SLABS SHALL BE ADEQUATELY SUPPORTED TO ENSURE ALL REINFORCEMENT STAYS IN PLACE DURING CONCRETE POURING.
7. STANDARD HOOKS AND BENDS. NZS3101:8.6.

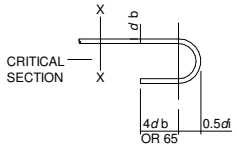

(a) Semi-Circular Hook

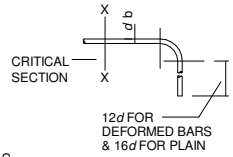

(b) 90° Hook

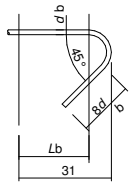

(c) Stirrup Hook

R0	Building Consent Issue	01/02/2017	

WALLACE DEVELOPMENT Company Limited

OMEGA ENGINEERING CONSULTANTS LIMITED

P O Box 1033
243 Broadway Avenue
Palmerston North 4410
P +64 6 356 6371 M +64 21 450 068
E stephen@omega-engineering.co.nz

project title	Development 1333 Cameron Road Tauranga	drawn	CHIRAG PATEL
		scale	@A3
		ALL DIMENSIONS TO BE VERIFIED ON SITE	
drawing title	Structural Notes	ref	1046
		sheet	S01-01
		rev	R0
		project date	01/02/2017
		issue date	01/02/2017

P:\DesignCo\Projects\Wallace\W136 5 Rathbone Whangarei\Documentation\W136 5 Rathbone St, WD 19 Whangarei 11JUL2016.pln

ALL DIMENSIONS ARE FROM OUTSIDE TO OUTSIDE OF BARS EXCEPT RADII WHICH ARE TO INSIDE OF BAR.. 'd' DENOTES BAR DIAMETER.

MINIMUM FORMER PIN DIAMETER (mm)			
BAR SIZE	MAIN STEEL GRADE 300/500	STIRRUPS AND TIES GRADE 300/500	
		PLAIN ROUND	DEFORMED
6	30	12	24
10	50	20	40
12	60	24	48
16	80	32	64
20	100	40	80
24	144	72	144
32	192	96	192
40	240	120	240

TABLE 8.1 & 8.2 NZS3101:2006

NOTE: FOR STIRRUPS AND TIES, WHERE THE MAIN BAR SIZE IS GREATER THAN THE MINIMUM FORMER PIN DIAMETER, THE MAIN BAR SIZE WILL GOVERN.

8. STANDARD BAR CRANK.

WHEN MAIN BARS ARE OFFSET. i.e. FOR CRANKED LAPS, THE SLOPE OF THE INCLINE PORTION OF THE BAR SHALL NOT EXCEED 1 IN 6.

9. REINFORCING SPIRAL FOR CONCRETE POLES MUST HAVE ONE FULL TURN PLUS WELDED TERMINATOR AT EACH END AND WHEN SPLICED.

STRUCTURAL STEEL

1. STEEL MEMBERS SHALL BE THE FOLLOWING GRADES U.N.O

MEMBER	GRADE
UB'S, UC'S, PFC'S & ANGLES (125 X 125 OR LARGER)	300
RHS, SHS, CHS	350

2. ALL COLD FORMED SECTIONS INCLUDING COLD ROLLED PURLINS TO CONFORM TO AS 1538 AND SHALL HAVE A MINIMUM YIELD STRESS OF 450 MPa U.N.O
3. THE ENDS OF ALL HOLLOW SECTIONS SHALL BE SEALED WITH 5mm MIN. STEEL PLATE, STEEL WELDED U.N.O.
4. ALL PLATES & CLEATS SHALL BE GRADE 250 U.N.O
5. ALL HOLDING DOWN BOLTS AND OTHER FIXING DEVICES SHALL HAVE A MINIMUM YIELD STRESS OF 300 MPa UNLESS NOTED OTHERWISE
6. ALL DRY PACK MORTAR / GROUT SHALL HAVE A COMPRESSIVE STRENGTH OF AT LEAST 30 MPa
7. SURFACE PREPARATION AND CORROSION PROTECTION OF STEELWORK SHALL BE IN ACCORDANCE WITH THE SPECIFICATION. ANY DAMAGE TO THE PROTECTIVE COATING OF STEELWORK SHALL BE MADE GOOD
8. BOLTS:
   - 8.1. BOLTS AND NUTS SHALL BE GRADE 8.8 STEEL TO AS 1252:ISO METRIC HIGH STRENGTH STEEL PLTS U.N.O. ALL BOLTED CONNECTIONS SHALL BE GRADE 8.8/S CONNECTIONS U.N.O.
   - 8.2. EDGE AND END DIST 2D
   - 8.3. PITCH DISTANCES 2.5D
   - 8.4. GAUGE DISTANCES 70, 90, 140 AS PER AISC. U.N.O
   - 8.5. ALL BOLTS SHALL HAVE AT LEAST ONE WASHER WHICH SHALL BE NOT LESS THAN TWICE THE NOMINAL BOLT SIZE IN DIAMETER.
   - 8.6. THE BOLTS SHALL BE SELECTED SO THAT THE PROJECTION BEYOND THE NUT IS NOT LESS THAN TWO THREADS AND NOT MORE THAN 10MM.
9. THE CONTRACTOR SHALL SUBMIT SHOP DRAWINGS OF ALL STEELWORK FOR APPROVAL PRIOR TO THE COMMENCEMENT OF WORK
10. MILL CERTIFICATES SHALL BE PROVIDED TO THE ENGINEER FOR ALL STEELWORK USED IN THIS CONTRACT.
11. HOLING:
   - 11.1. HOLES FOR BOLTS SHALL BE DRILLED OR PUNCHED AND NOT GAS CUT.
   - 11.2. COMMON DETAILING CRITERIA:
   - 11.3. STANDARD HOLES
   - 11.4. SLOTTED HOLES D-2mm
   - 11.5. H.D. BOLTS D-2mm WIDE AND 2.5 LONG
   - 11.6. 133D (FABRICATED WASHER) 1.22D (STANDARD WASHER)
12. WELDS:
   - 12.1. ALL WELDED CONNECTIONS SHALL BE OF SP GRADE METAL ARC AS SHOWN ON THE DRAWINGS.
   - 12.2. ALL WELDING SHALL COMPLY WITH AS1554:PART 1 "WELDING OF STEEL STRUCTURES U.N.O.
   - 12.3. WELDS EXPOSED IN THE COMPLETED BUILDING AND IN PARTICULAR BUTT WELDS SHALL BE NEATLY FINISHED AND GROUND SMOOTH.
   - 12.4. ALL BUTT WELDS SHALL BE FULL PENETRATION, USING BACKING PLATES AS REQUIRED.
   - 12.5. WELDING OF HOLLOW SECTIONS SHALL INCORPORATE INTERNAL SECTIONS OR BACKING PLATES AS NECESSARY TO COMPLETE THE SPECIFIED WELD.
   - 12.6. ALL FILLET WELDS TO BE 6mm FILLET WELD ALL ROUND U.N.O
13. CONNECTIONS:
   - 13.1. WHERE HERA CONNECTIONS SPECIFIED CONTRACTOR TO BE ABLE TO ACCESS HERA CONNECTIONS INFORMATION INDEPENDENTLY.

14. STANDATD DHS DETAILS:

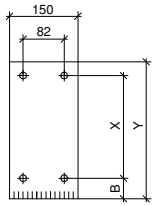

CLEATS AT INTERNAL SUPPORTS

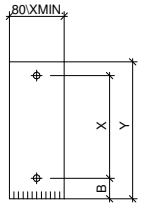

CLEATS AT END SUPPORTS

DHS PURLIN	DIMENSIONS		
	B	X	Y
150/12 AND 15	41	80	150
200/12, 15 AND 18	48	120	200
250/13, 15 AND 18	53	160	250
300/15 AND 18	60	200	300
350/18	65	240	340
400/20	70	280	380

CLEAT DIMENSIONS

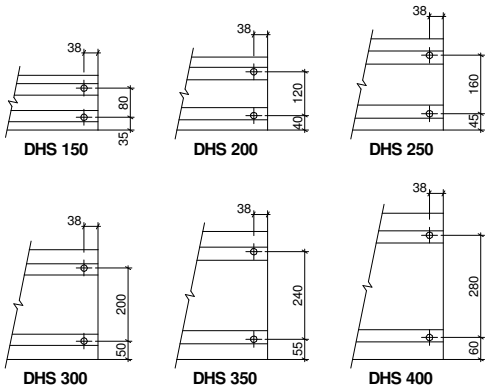

DHS HOLE LOCATIONS

R0	Building Consent Issue	01/02/2017	

WALLACE DEVELOPMENT Company Limited

OMEGA ENGINEERING CONSULTANTS LIMITED

P O Box 1033
243 Broadway Avenue
Palmerston North 4410
P +64 6 356 6371 M +64 21 450 068
E stephen@omega-engineering.co.nz

project title	Development 1333 Cameron Road Tauranga	drawn	CHIRAG PATEL
		scale	@A3
		ALL DIMENSIONS TO BE VERIFIED ON SITE	
drawing title	Structural Notes	ref	1046
		sheet	S01-02
		rev	R0
		project date	01/02/2017
		issue date	01/02/2017

P:\DesignCo\Projects\Wallace\W136 5 Rathbone Whangarei\Documentation\W136 5 Rathbone St, WD 19 Whangarei 11JUL2016.pln

3 Structure

3.14.13 150mm PC PANEL WITH 15 mm CHAMFERS TO ALL EXPOSED EDGES REFER TO STRUCTURAL DRAWINGS

F1 500 X 500 30Mpa GROUND BEAMS

F2 750 X 500 30Mpa GROUND BEAMS

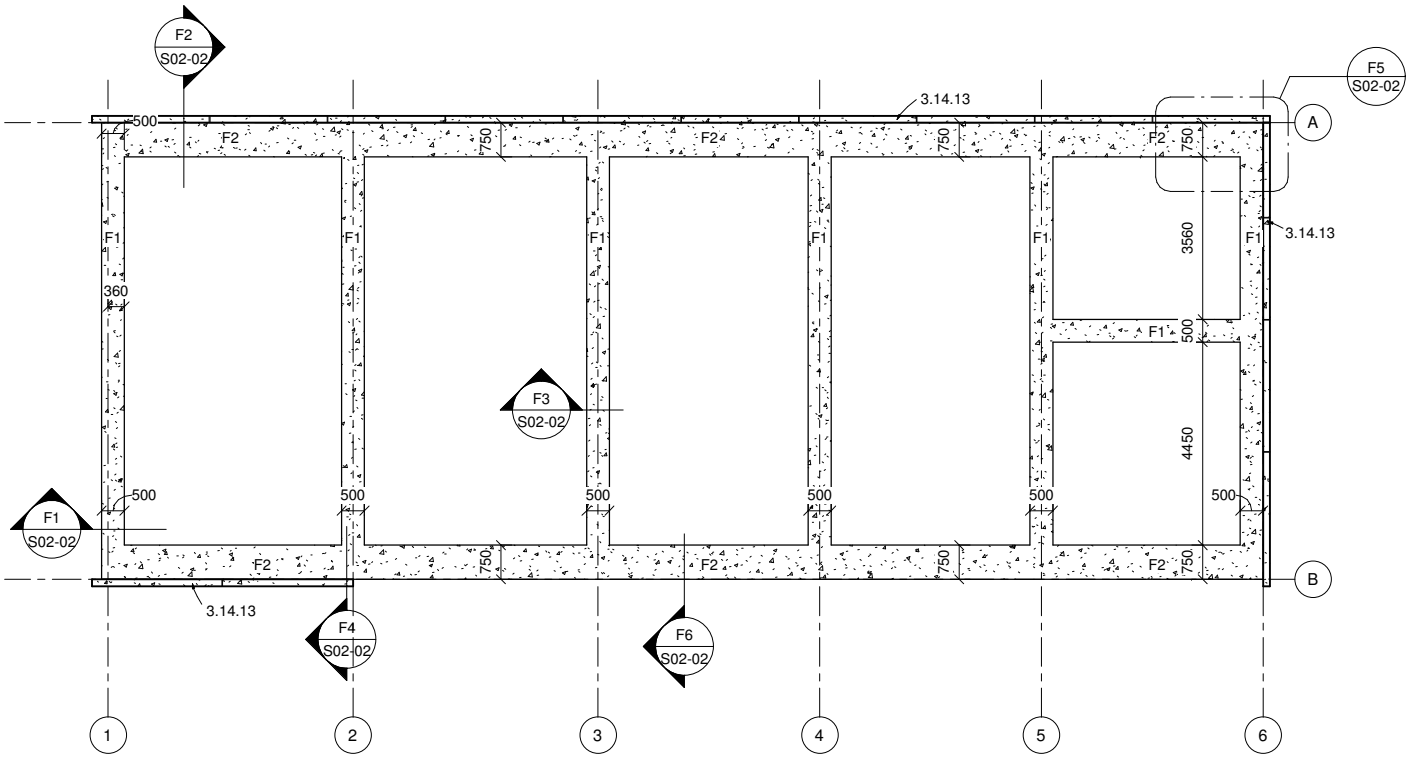

1 Foundation Plan

1 : 100

R0	Building Consent Issue	01/02/2017	

WALLACE DEVELOPMENT Company Limited

OMEGA ENGINEERING CONSULTANTS LIMITED

P O Box 1033
243 Broadway Avenue
Palmerston North 4410
P +64 6 356 6371 M +64 21 450 068
E stephen@omega-engineering.co.nz

project title	Development 1333 Cameron Road Tauranga	drawn	CHIRAG PATEL
		scale	@A3
		ALL DIMENSIONS TO BE VERIFIED ON SITE	
drawing title	Foundation Plan	ref	1046
		sheet	S02-01
		rev	R0
		project date	01/02/2017
		issue date	01/02/2017

P:\DesignCo\Projects\Wallace\W136 5 Rathbone Whangarei\Documentation\W136 5 Rathbone St, WD 19 Whangarei 11JUL2016.pln

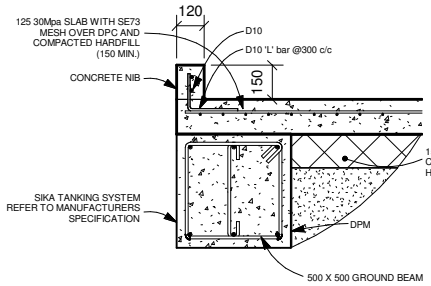

F1 DETAIL S02-01 Scale 1:20

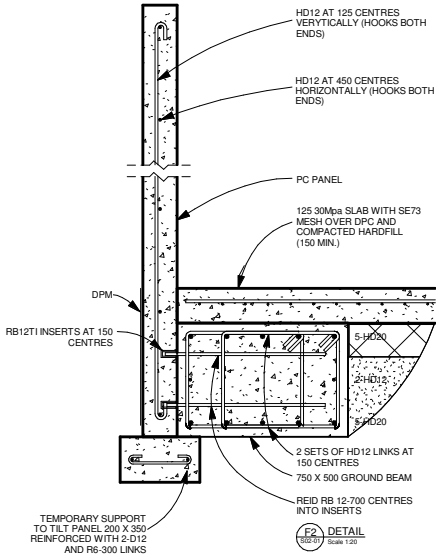

F2 DETAIL S02-01 Scale 1:20

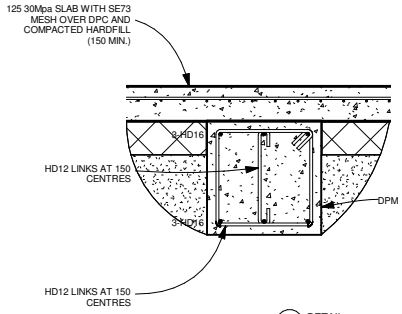

F3 DETAIL S02-01 Scale 1:20

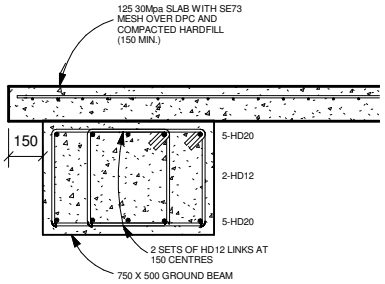

F6 DETAIL S02-01 Scale 1:20

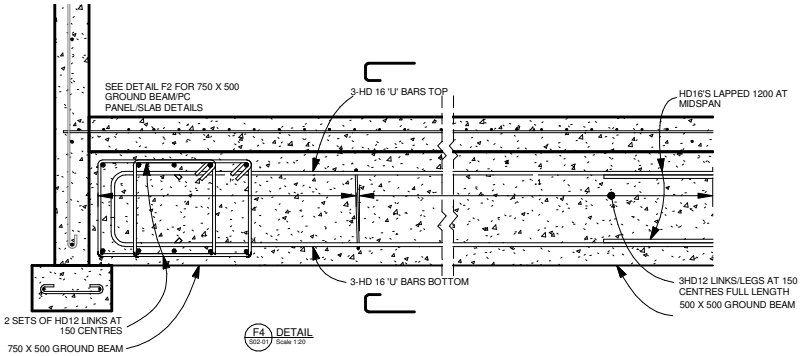

F4 DETAIL S02-01 Scale 1:20

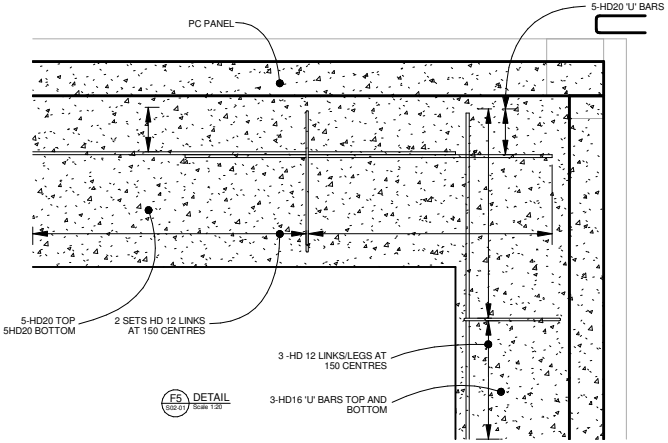

F5 DETAIL S02-01 Scale 1:20

R0	Building Consent Issue	01/02/2017	

WALLACE DEVELOPMENT Company Limited

OMEGA ENGINEERING CONSULTANTS LIMITED

P O Box 1033
243 Broadway Avenue
Palmerston North 4410
P +64 6 356 6371 M +64 21 450 068
E stephen@omega-engineering.co.nz

project title	Development 1333 Cameron Road Tauranga	drawn	CHIRAG PATEL
		scale	@A3
		ALL DIMENSIONS TO BE VERIFIED ON SITE	
drawing title	Foundation Details	ref	1046
		sheet	S02-02
		rev	R0
		project date	01/02/2017
		issue date	01/02/2017

P:\DesignCo\Projects\Wallace\W136 5 Rathbone Whangarei\Documentation\W136 5 Rathbone St, WD 19 Whangarei 11JUL2016.pln

3 Structure

3.14.13	150mm PC PANEL WITH 15 mm CHAMFERS TO ALL EXPOSED EDGES REFER TO STRUCTURAL DRAWINGS
3.14.04	125 30Mpa SLAB WITH SE73 MESH OVER DPC AND COMPACTED HARDFILL (150 MIN.)
3.14.05	SAW CUT-SEE SHEET S01-01
3.14.14	120 X 150 CONCRETE NIB WALL
A	310 UB 40

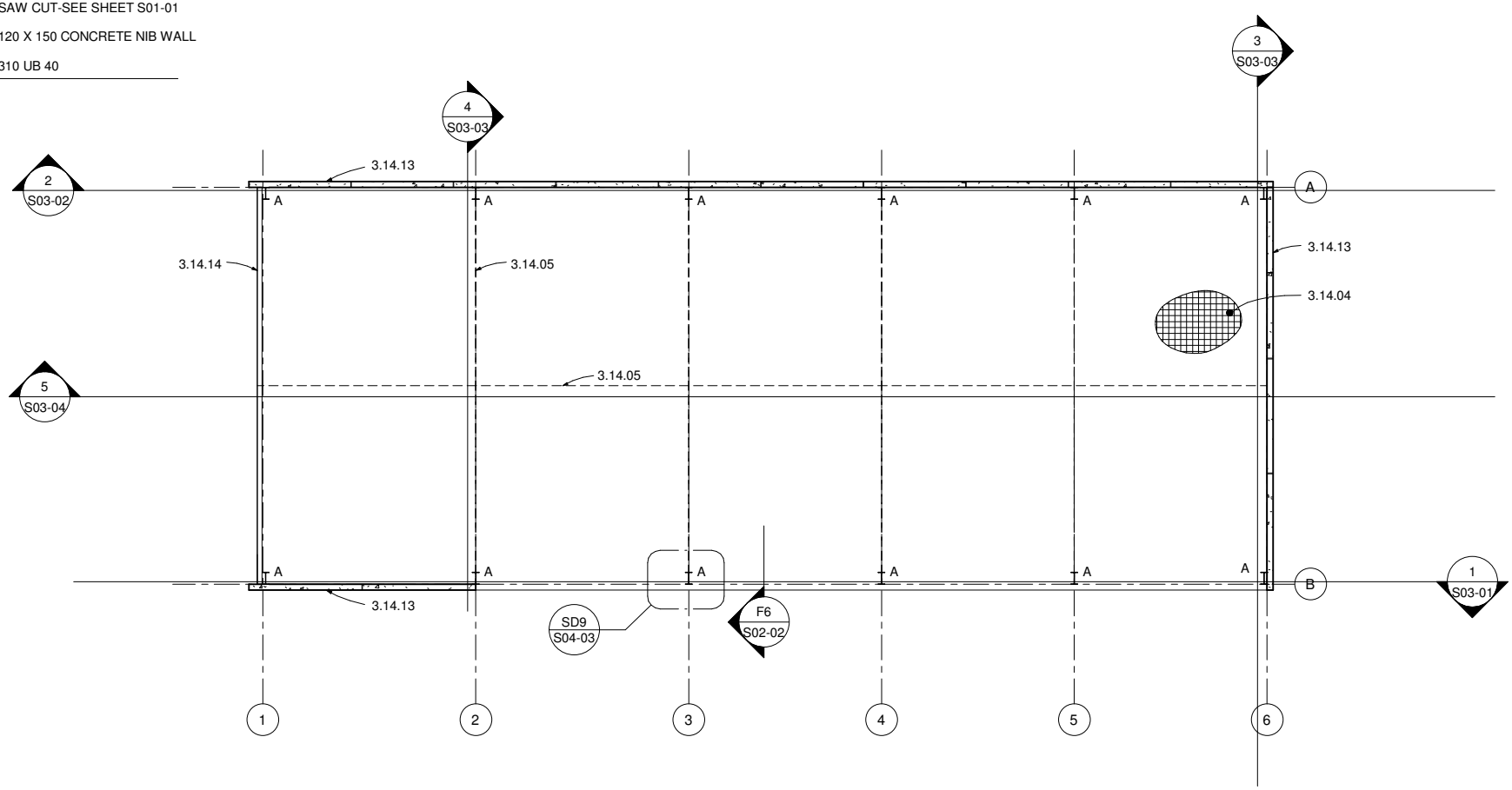

Structural Floor Plan

1

1 : 100

R0	Building Consent Issue	01/02/2017	

WALLACE DEVELOPMENT Company Limited

OMEGA ENGINEERING CONSULTANTS LIMITED

P O Box 1033
243 Broadway Avenue
Palmerston North 4410
P +64 6 356 6371 M +64 21 450 068
E stephen@omega-engineering.co.nz

project title	Development 1333 Cameron Road Tauranga	drawn	CHIRAG PATEL
		scale	@A3
		ALL DIMENSIONS TO BE VERIFIED ON SITE	
drawing title	Structural Floor and Slab Plan	ref	1046
		sheet	S02-03
		rev	R0
		project date	01/02/2017
		issue date	01/02/2017

P:\DesignCo\Projects\Wallace\W136 5 Rathbone Whangarei\Documentation\W136 5 Rathbone St, WD 19 Whangarei 11JUL2016.pln

3 Structure

3.14.03	DHS200/12 PURLINS AT 1200 CENTRES MAX.
3.14.12	HST M12 MECHANICAL ANCHOR FASTENERS
3.14.13	150mm PC PANEL REINFORCEMENT AS FOR PANEL 2
3.14.14	120 X 150 CONCRETE NIB WALL
A	310 UB 40
B	250 UB 31
C	100 SHS 6
D	150 PFC
E	200 PFC
G	DB 89/12
H	150 UB 14
RCB 16	REID RB 16 ROOF BRACING

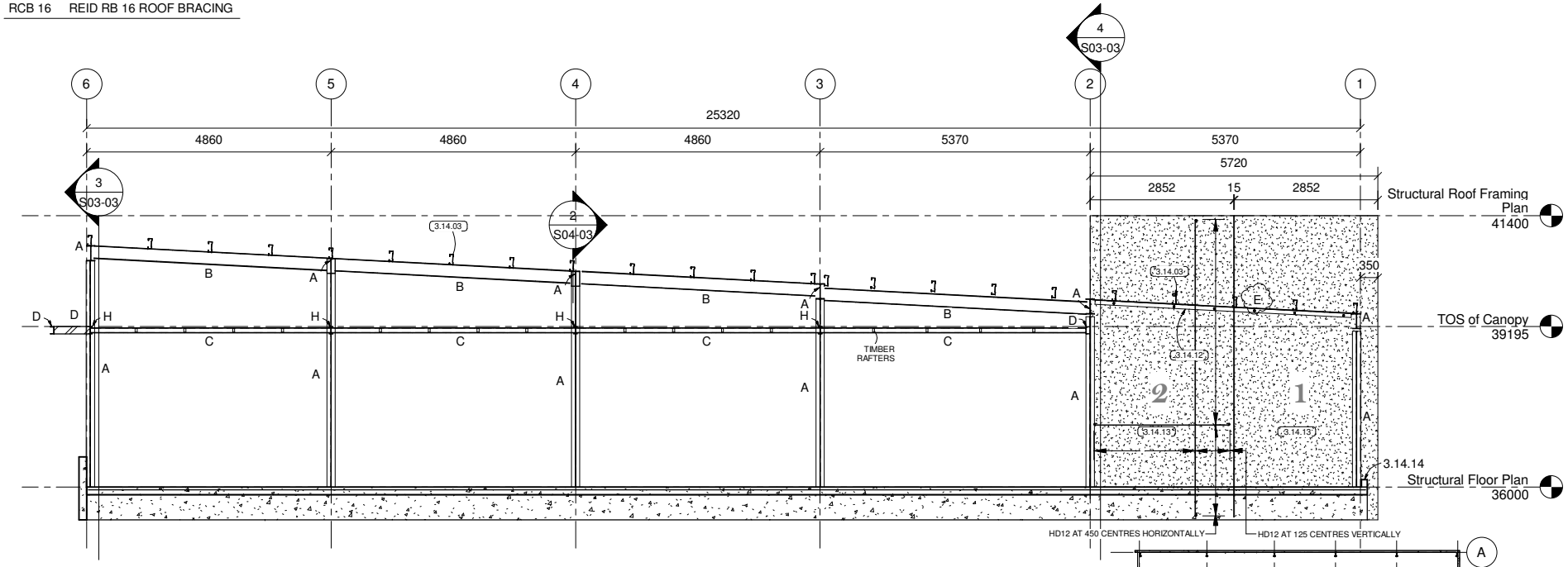

1 Elevation Precast Line B

1 : 75

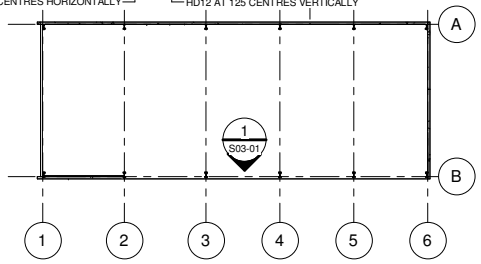

Key Plan

R1	Amended Section Size	20/03/2017
R0	Building Consent Issue	01/02/2017

WALLACE DEVELOPMENT Company Limited

OMEGA ENGINEERING CONSULTANTS LIMITED

P O Box 1033
243 Broadway Avenue
Palmerston North 4410
P +64 6 356 6371 M +64 21 450 068
E stephen@omega-engineering.co.nz

project title	Development 1333 Cameron Road Tauranga	drawn	CHIRAG PATEL
		scale	@A3
		ALL DIMENSIONS TO BE VERIFIED ON SITE	
drawing title	Elevation Precast Line B	ref	1046
		sheet	S03-01
		rev	R1
		project date	01/02/2017
		issue date	01/02/2017

P:\DesignCo\Projects\Wallace\W136 5 Rathbone Whangarei\Documentation\W136 5 Rathbone St, WD 19 Whangarei 11JUL2016.pln

3 Structure

3.14.03	DHS200/12 PURLINS AT 1200 CENTRES MAX.
3.14.12	HST M12 MECHANICAL ANCHOR FASTENERS @ 1200C/C
3.14.13	150mm PC PANEL REINFORCEMENT AS FOR PANEL 2
3.14.14	120 X 150 CONCRETE NIB WALL
A	310 UB 40
B	250 UB 31
C	100 SHS 6
D	150 PFC
E	200 PFC
G	DB 89/12
H	150 UB 14
I	100x100x10mm EA 100mm LONG 6FWAR TO UB @ 1200C/C
RCB 16	REID RB 16 ROOF BRACING

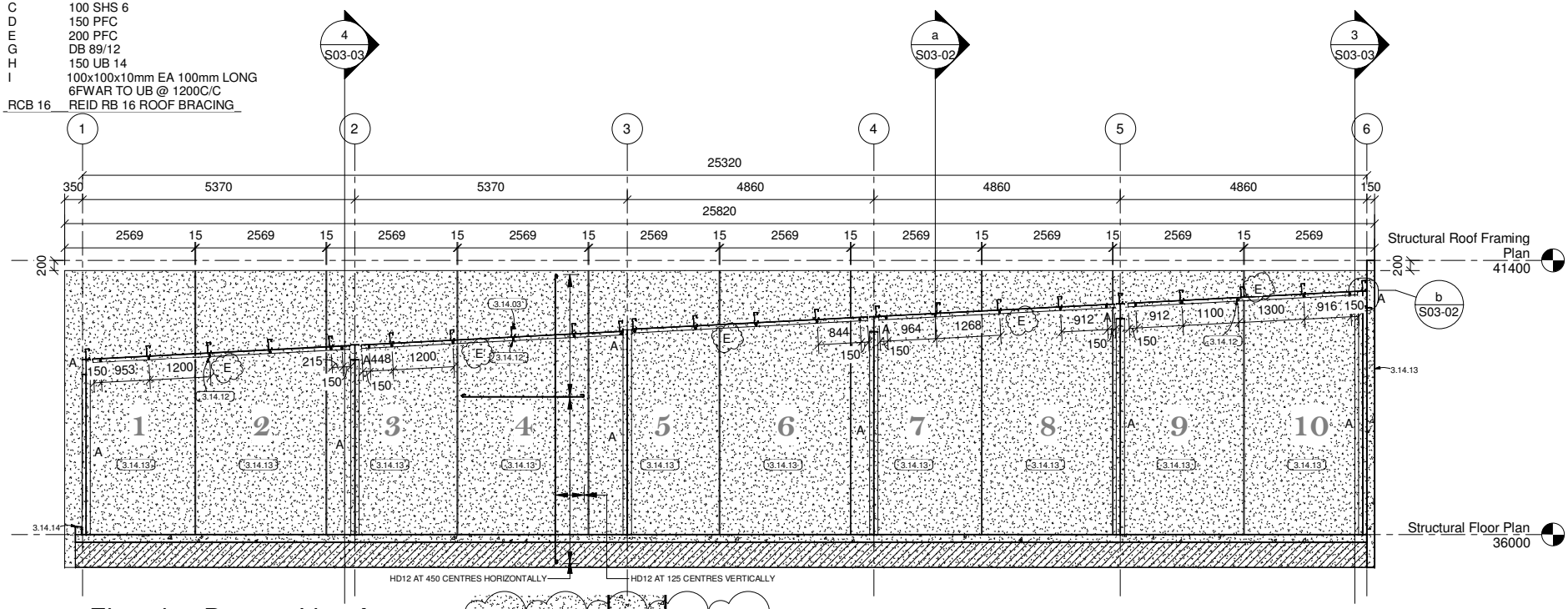

2 Elevation Precast Line A

1 : 75

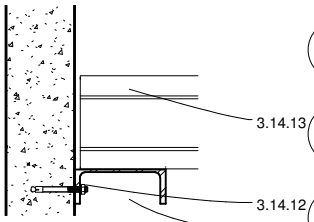

a Section a

1 : 10

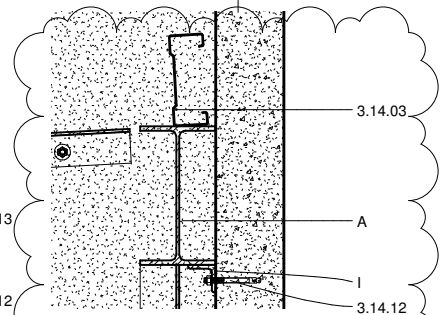

b Section b

1 : 10

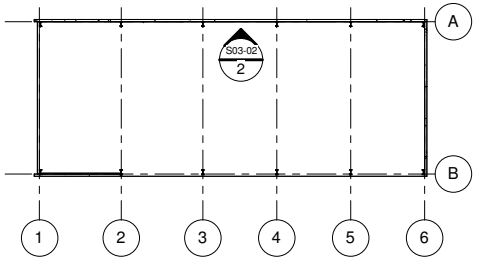

Key Plan

R1	Detail Added	20/03/2017
R0	Building Consent Issue	01/02/2017

WALLACE DEVELOPMENT Company Limited

OMEGA ENGINEERING CONSULTANTS LIMITED

P O Box 1093
243 Broadway Avenue
Palmerston North 4410
P +64 6 356 6371 M +64 21 450 068
E stephen@omega-engineering.co.nz

project title	Development 1333 Cameron Road Tauranga	drawn	CHIRAG PATEL
		scale	@A3
		ALL DIMENSIONS TO BE VERIFIED ON SITE	
drawing title	Elevation Precast Line A	ref	1046
		sheet	S03-02
		rev	R1
		project date	01/02/2017
		issue date	01/02/2017

P:\DesignCo\Projects\Wallace\W136 5 Rathbone Whangarei\Documentation\W136 5 Rathbone St, WD 19 Whangarei 11JUL2016.pln

3 Structure

3.14.03	DHS200/12 PURLINS AT 1200 CENTRES MAX.
3.14.12	HST M12 MECHANICAL ANCHOR FASTENERS @ 1200C/C
3.14.13	150mm PC PANEL REINFORCEMENT AS FOR PANEL 2
3.14.14	120 X 150 CONCRETE NIB WALL
A	310 UB 40
B	250 UB 31
C	100 SHS 6
D	150 PFC
E	200 PFC
G	DB 89/12
H	150 UB 14
I	100x100x10mm EA 100mm LONG 6FWAR TO UB @ 1200C/C
RCB 16	REID RB 16 ROOF BRACING

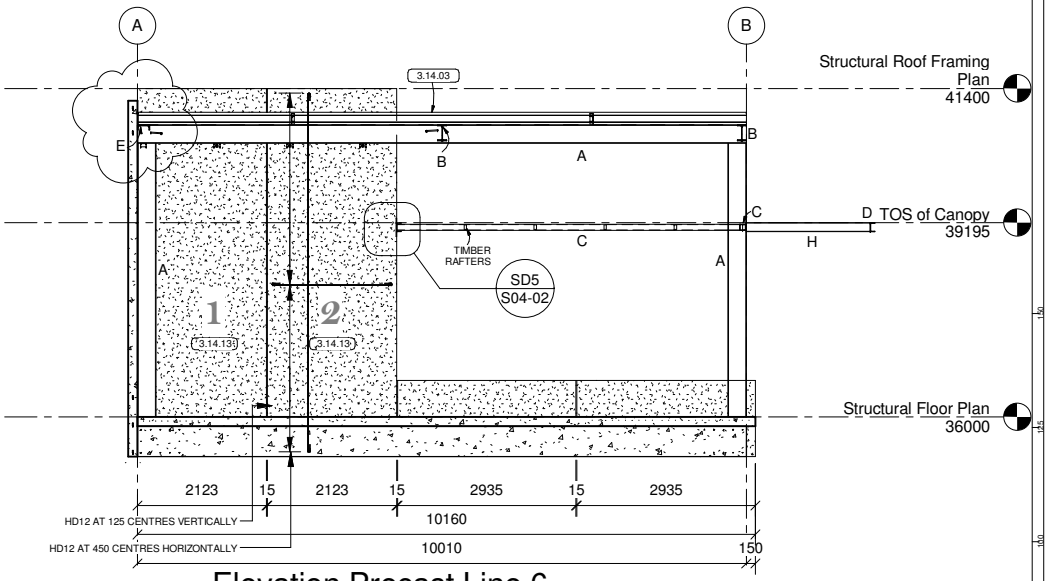

3 Elevation Precast Line 6

1 : 75

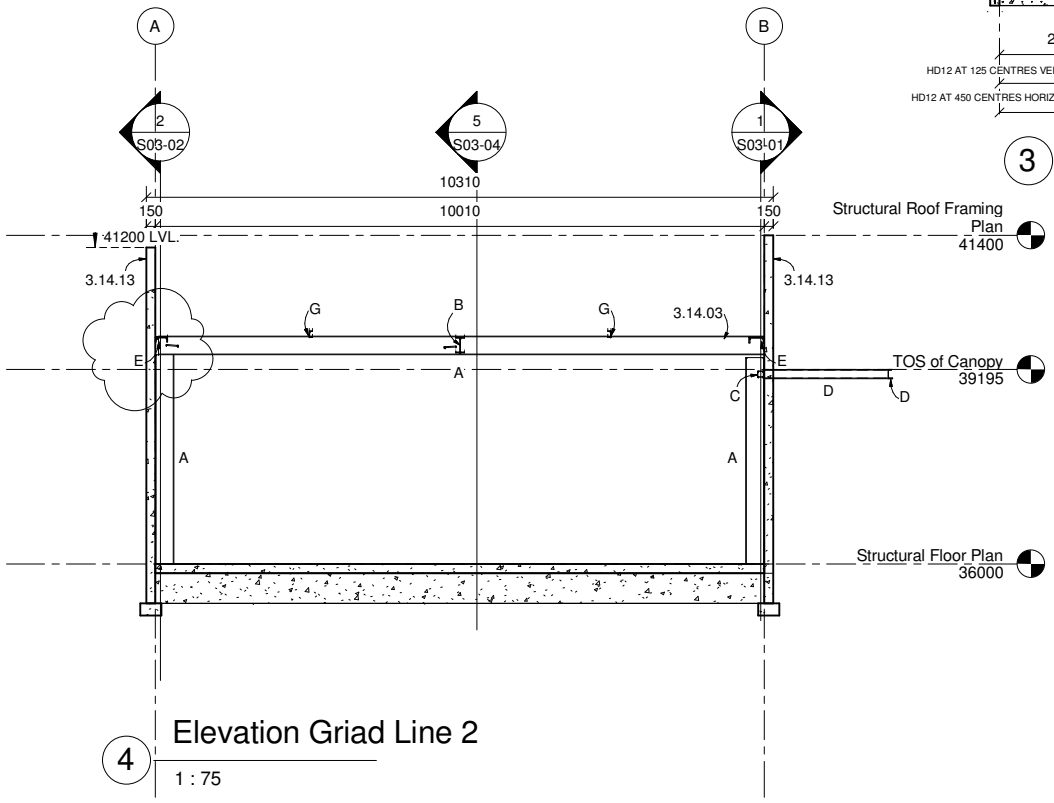

4 Elevation Griad Line 2

1 : 75

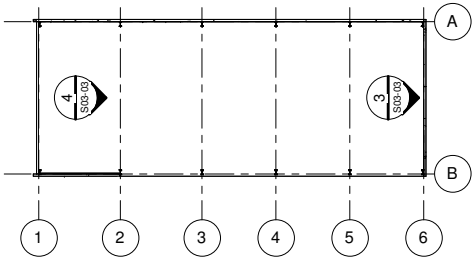

Key Plan

R1	Amended Section Size	20/03/2017
R0	Building Consent Issue	01/02/2017

WALLACE DEVELOPMENT Company Limited

OMEGA ENGINEERING CONSULTANTS LIMITED

P O Box 1033
263 Broadway Avenue
Palmerston North 4410
P +64 6 356 6371 M +64 21 450 068
E stephen@omegaengineering.co.nz

project title	Development 1333 Cameron Road Tauranga	drawn	CHIRAG PATEL
		scale	@A3
		ALL DIMENSIONS TO BE VERIFIED ON SITE	
drawing title	Elevation Precast Line 2 & 6	ref	1046
		sheet	S03-03
		rev	R1
		project date	01/02/2017
		issue date	01/02/2017

P:\DesignCo\Projects\Wallace\W136 5 Rathbone Whangarei\Documentation\W136 5 Rathbone St, WD 19 Whangarei 11JUL2016.pln

3 Structure

3.14.03	DHS200/12 PURLINS AT 1200 CENTRES MAX.
3.14.12	HST M12 MECHANICAL ANCHOR FASTENERS
3.14.13	150mm PC PANEL REINFORCEMENT AS FOR PANEL
A	310 UB 40
B	250 UB 31
C	100 SHS 6
D	150 PFC
E	200 PFC
G	DB 89/12
RCB 16	REID RB 16 ROOF BRACING

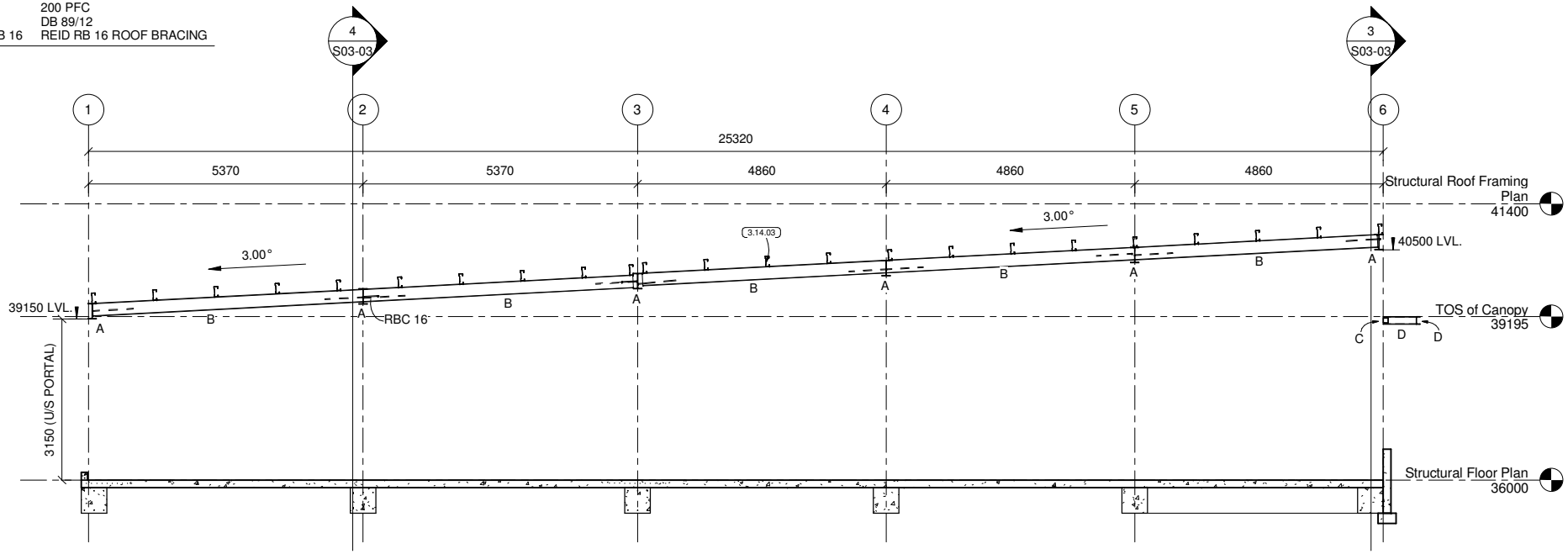

5 Section

1 : 75

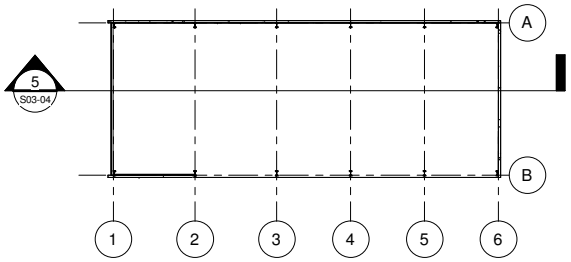

Key Plan

R1	Amended Section Size	20/03/2017
R0	Building Consent Issue	01/02/2017

WALLACE DEVELOPMENT Company Limited

OMEGA ENGINEERING CONSULTANTS LIMITED

P O Box 1033
243 Broadway Avenue
Palmerston North 4410
P +64 6 356 6371 M +64 21 450 068
E stephen@omega-engineering.co.nz

project title	Development 1333 Cameron Road Tauranga	drawn	CHIRAG PATEL
		scale	@A3
		ALL DIMENSIONS TO BE VERIFIED ON SITE	
drawing title	Section	ref	1046
		sheet	S03-04
		rev	R1
		project date	01/02/2017
		issue date	01/02/2017

P:\DesignCo\Projects\Wallace\W136 5 Rathbone Whangarei\Documentation\W136 5 Rathbone St, WD 19 Whangarei 11JUL2016.pln

3 Structure

3.14.03	DHS200/12 PURLINS AT 1200 CENTRES MAX.
3.14.12	HST M12 MECHANICAL ANCHOR FASTENERS
3.14.13	150mm PC PANEL REINFORCEMENT AS FOR PANEL 2
A	310 UB 40
B	250 UB 31
C	100 SHS 6
D	150 PFC
E	200 PFC
G	DB 89/12
H	150 UB 14
RCB 16	REID RB 16 ROOF BRACING

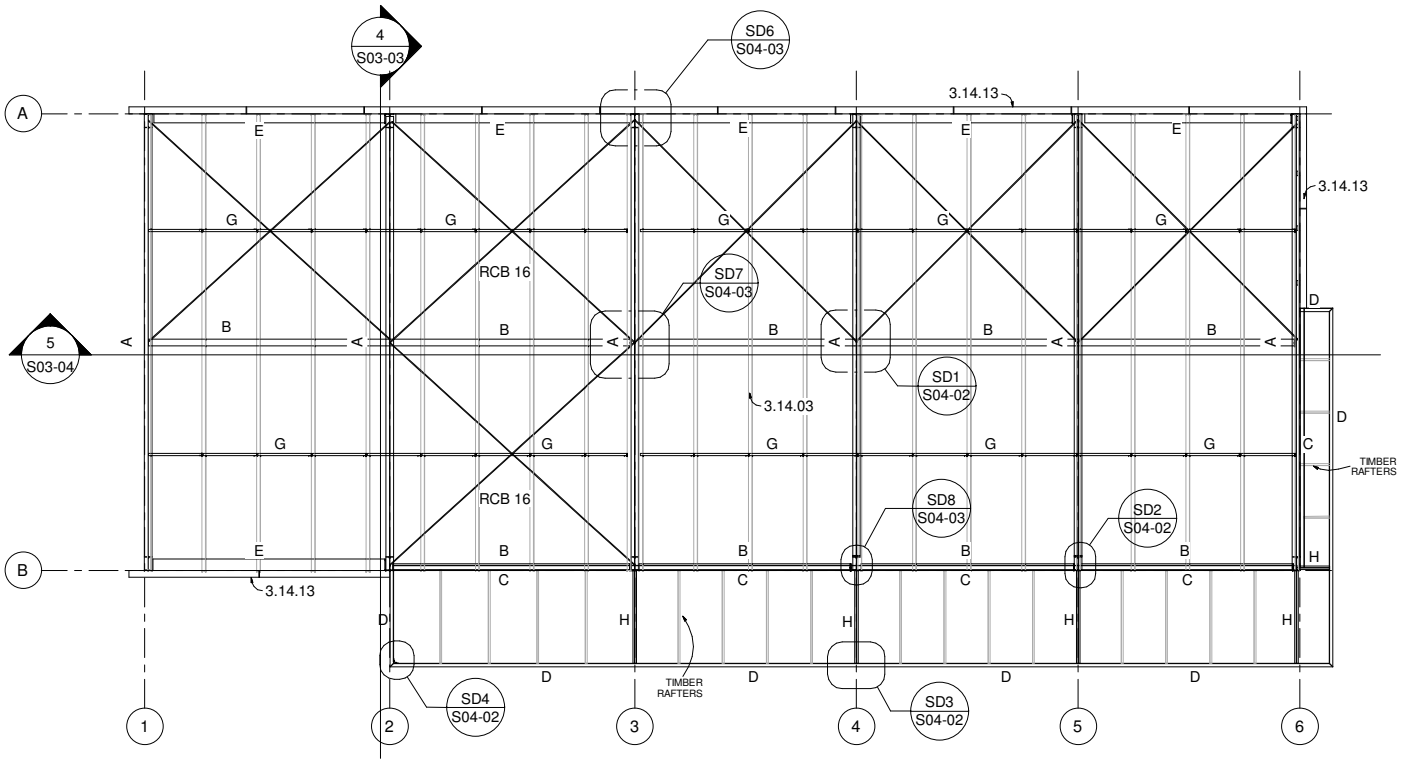

R1	Amended Section Size	20/03/2017
R0	Building Consent Issue	01/02/2017

WALLACE DEVELOPMENT Company Limited

OMEGA ENGINEERING CONSULTANTS LIMITED
P O Box 1033
243 Broadway Avenue
Palmerston North 4410
P +64 6 356 6371 M +64 21 450 068
E stephen@omega-engineering.co.nz

project title	Development 1333 Cameron Road Tauranga	drawn	CHIRAG PATEL
		scale	@A3
		ALL DIMENSIONS TO BE VERIFIED ON SITE	
drawing title	Roof Plan	ref	1046
		sheet	S04-01
		rev	R1
		project date	01/02/2017
		issue date	01/02/2017

P:\DesignCo\Projects\Wallace\W136 5 Rathbone Whangarei\Documentation\W136 5 Rathbone St, WD 19 Whangarei 11JUL2016.pln

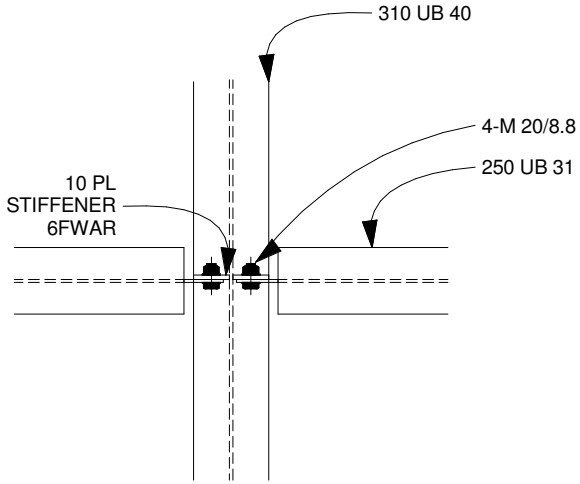

SD1 S04-01 DETAIL Scale 1:10

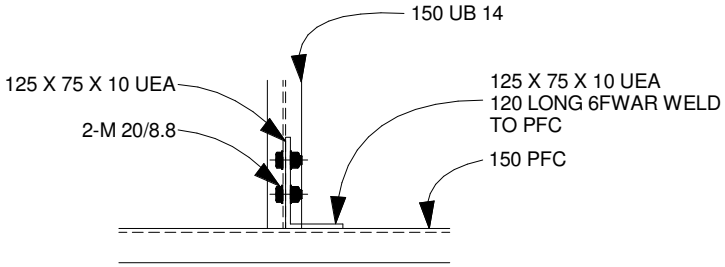

SD3 S04-01 DETAIL Scale 1:10

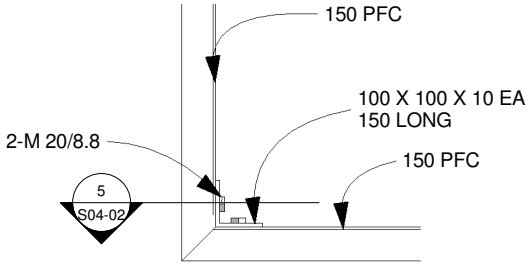

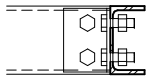

5 SECTION 5
1 : 10

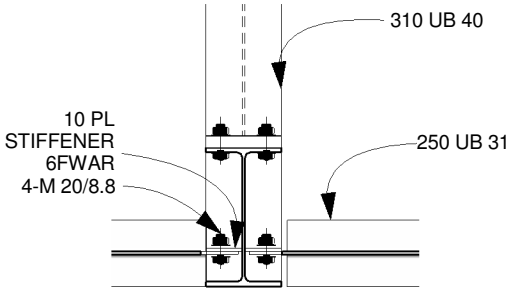

SD2 S04-01 DETAIL Scale 1:10

SD4 S04-01 DETAIL Scale 1:10

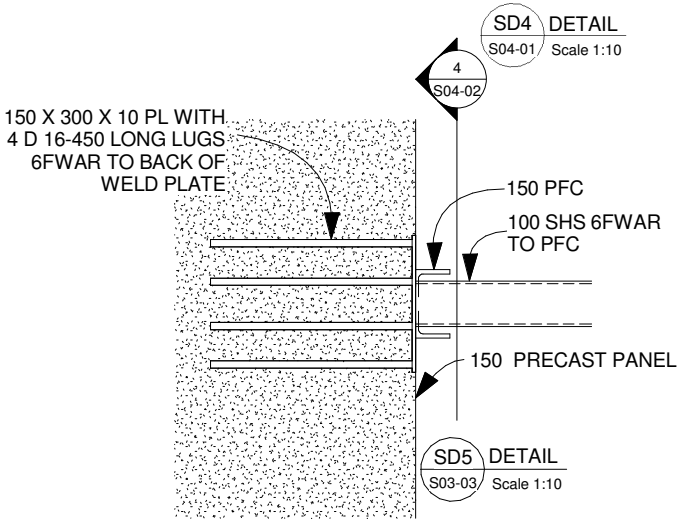

SD5 S03-03 DETAIL Scale 1:10

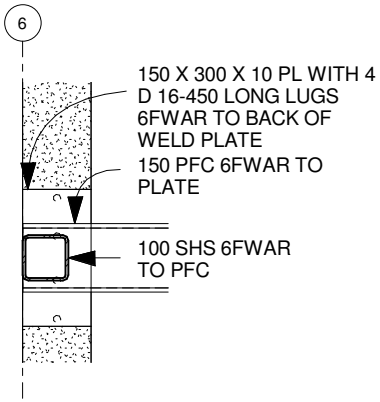

4 SECTION 4
1 : 10

R0	Building Consent Issue	01/02/2017	

WALLACE DEVELOPMENT Company Limited

OMEGA ENGINEERING CONSULTANTS LIMITED

P O Box 1033
243 Broadway Avenue
Palmerston North 4410
P +64 6 356 6371 M +64 21 450 068
E stephen@omega-engineering.co.nz

project title	Development 1333 Cameron Road Tauranga	drawn	CHIRAG PATEL
		scale	@A3
			ALL DIMENSIONS TO BE VERIFIED ON SITE
drawing title	Steel Details	ref	1046
		sheet	S04-02
		rev	R0
		project date	01/02/2017
		issue date	01/02/2017

P:\DesignCo\Projects\Wallace\W136 5 Rathbone Whangarei\Documentation\W136 5 Rathbone St, WD 19 Whangarei 11JUL2016.pln

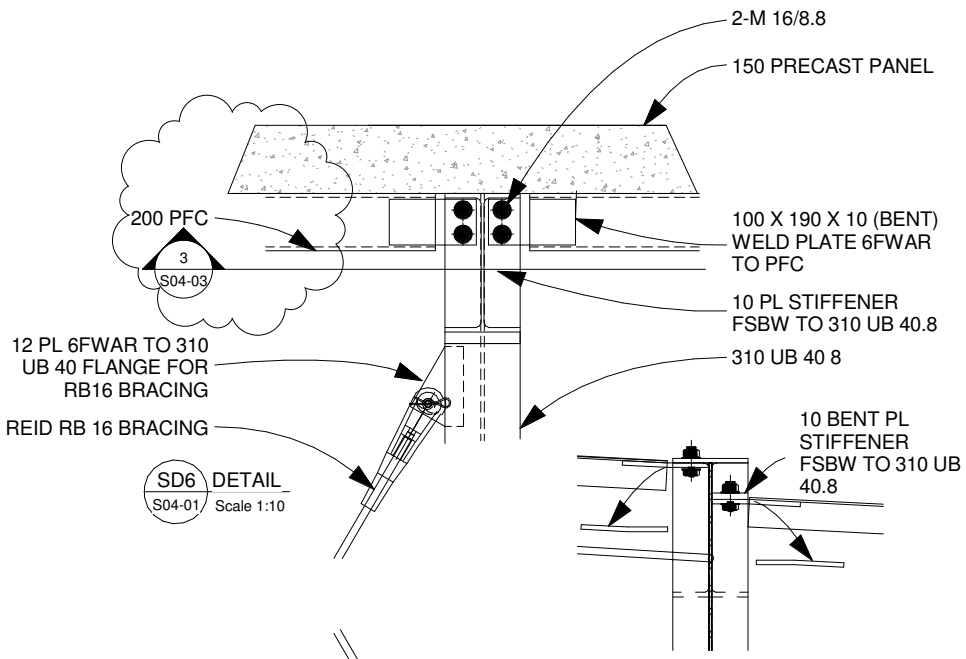

SD6 DETAIL
S04-01 Scale 1:10

3 SECTION 3
1 : 10

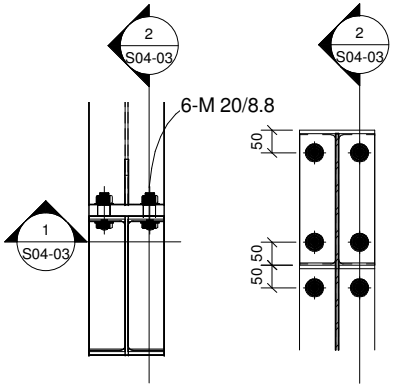

SD8 DETAIL
S04-01 Scale 1:10

1 SECTION 1
1 : 10

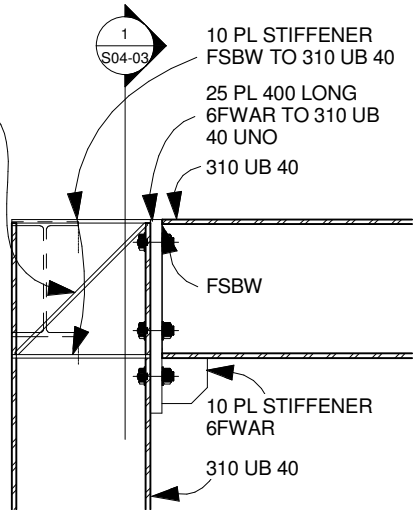

2 SECTION 2
1 : 10

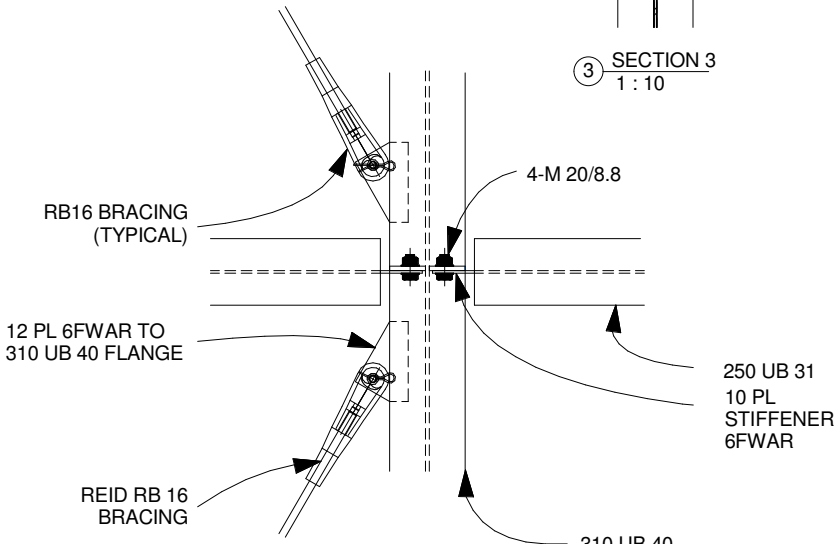

SD7 DETAIL
S04-01 Scale 1:10

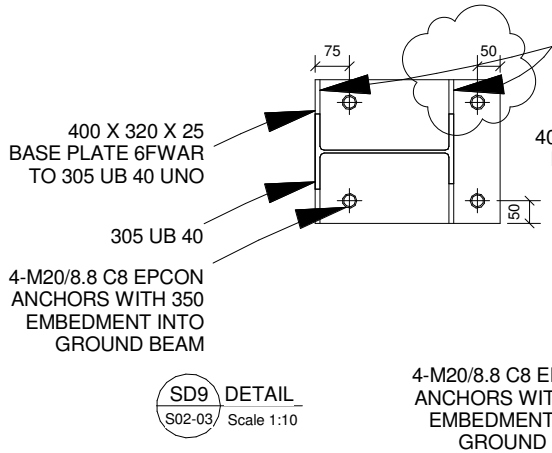

SD9 DETAIL
S02-03 Scale 1:10

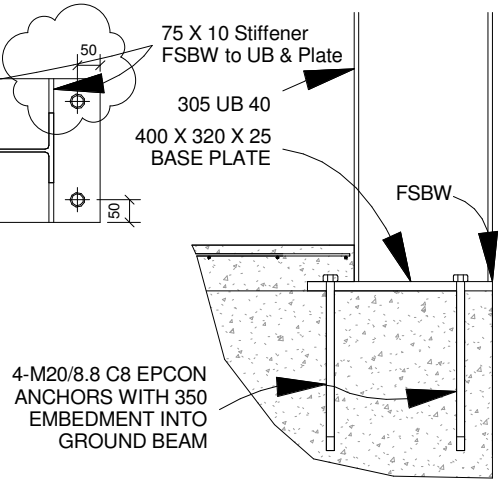

R1	Details Revised	20/03/2017
R0	Building Consent Issue	01/02/2017

WALLACE DEVELOPMENT Company Limited

OMEGA ENGINEERING CONSULTANTS LIMITED

P O Box 1033
243 Broadway Avenue
Palmerston North 4410
P +64 6 356 6371 M +64 21 450 068
E stephen@omega-engineering.co.nz

project title	Development 1333 Cameron Road Tauranga	drawn	CHIRAG PATEL
		scale	@A3
		ALL DIMENSIONS TO BE VERIFIED ON SITE	
drawing title	Steel Details	ref	1046
		sheet	S04-03
		rev	R1
		project date	01/02/2017
		issue date	01/02/2017

P:\DesignCo\Projects\Wallace\W136 5 Rathbone Whangarei\Documentation\W136 5 Rathbone St, WD 19 Whangarei 11JUL2016.pln